# BB2704-20P

## Bluetooth 4.2 Module

DISCLAIMER AND COPYRIGHT NOTICE

Information in this document, including URL references, is subject to change without notice.

This document is provided “As if” with no whatsoever, including any warranty of merchantability, noninfringement, fitness for any purpose, or any warranty otherwise arising out of any proposal, specification or samples.

All liability, including liability for infringement of any proprietary rights, relating to use of information in this document is disclaimed. No licenses express or implied, by estoppel or otherwise, to any intellectual property rights are granted herein.

The Bluetooth logo and symbol belong to the Bluetooth SIG Inc.

The Wi-Fi Alliance Member Logo is a trademark of the Wi-Fi Alliance.

All trade names, trademarks and registered trademarks mentioned in this document are property of their respective owners, and are hereby acknowledged.

Copyright ITON Technology Corp. All rights reserved.

# Table of Contents

Table of Contents....2
1. Device Overview....3
1.1 Features....3
1.2 Applications....4
1.3 Descriptions....4
1.4 Functional Block Diagram....4
2. Pin Configuration and Functions....5
2.1 Module Pin Diagram....5
2.2 Pin Functions....5
3. Specifications....6
3.1 Absolute Maximum Rating....6
3.2 Recommended Operating Conditions....6
3.3 RF Characteristics....7
3.3.1 Receiver RF Specifications....7
3.3.2 Transmitter RF Specifications....8
3.3.3 BLE RF Specifications....8
3.4 Power Consumption Summary....9
4. Application, Implementation, and Layout....9
4.1 Application Diagram....9
4.2 Typical Application Circuit....10
4.3 Layout Guideline....10
5. Mechanical and Package....11
5.1 Module Size....11
5.2 Recommended PCB Footprint....11
5.3 Package Information....12
6. Thermal Reflow....13
7. Ordering Information....13
8. Revision History....13

# 1. Device Overview

## 1.1 Features

- Bluetooth V4.2 + EDR with integrated Class 1 PA
- BT host digital interface (can be used concurrently with below interfaces):
  - USB 2.0 full-speed with LPM support (up to 12 Mbps)
  - UART (up to 4 Mbps)
- Integrated RF section
  - Single-ended, 50Ω RF interface
  - Built-in TX/RX switch functionality
  - TX Class 1 output power capability
  - RX sensitivity basic rate of –93.5 dBm
  - RX sensitivity for Low Energy of –96 dBm
- GCI-enhanced coexistence support, ability to coordinate BT SCO transmissions around WLAN receives
- Supports maximum Bluetooth data rates over HCI and USB interfaces
- I2S/PCM for BT audio
- HCI high-speed UART (H4, H4+) transport support
- Wideband speech support (16 bits linear data, MSB first, left-justified at 4K samples/s for transparent air coding, both through I2S and PCM interface)
- Bluetooth SmartAudio® technology improves voice and music quality to headsets
- Bluetooth low-power inquiry and page scan
- Bluetooth low energy (BLE) support
- Supports Cypress proprietary 2 Mbps low energy mode
- Maximum of 127 LE Connections
- Supports TBFC (Triggered Cypress [Bluetooth] Fast Connect)
- Bluetooth packet loss concealment (PLC)
- Bluetooth wide band speech (WBS)
- High-speed HCI UART transport support
  - H4 five-wire UART (four signal wires, one ground wire)
  - Maximum UART baud rates of 4 Mbps
  - Low-power out-of-band BT_WAKE and HOST_WAKE signaling
  - VSC from host transport to UART
    - Proprietary compression scheme (allows more than two simultaneous A2DP packets and up to five devices at a time)
- HCI USB transport support
  - USB version 2.0 full-speed compliant interface with LPM support
  - UHE (proprietary method for emulating a human interface device (HID) at system boot up)
- Standard Bluetooth test modes

- Extended radio and production test mode features
- Full support for power savings modes:
  - Bluetooth standard sniff
  - Deep sleep modes and regulator shutdown
- Built-in LPO clock
- Larger patch RAM space to support future enhancements
- Serial flash Interface with native support for devices from several manufacturers
- One-Time Programmable (OTP) memory

### 1.2 Applications

- Remotes: TV/Entertainment
- Wearables
- USB dongles
- Smart metering

### 1.3 Descriptions

The module BB2704-20P is designed base on the Cypress® CYW20704 .The Cypress CYW20704 complies with Bluetooth Core Specification, version 4.2+ EDR and is designed for use in standard Host Controller Interface (HCI) UART and HCI USB applications. The combination of the Bluetooth Baseband Core (BBC), a Peripheral Transport Unit (PTU), and a Cortex-M3 based microprocessor with on-chip ROM provides a complete lower layer Bluetooth protocol stack, including the Link Controller (LC), Link Manager (LM), and HCI.

### 1.4 Functional Block Diagram

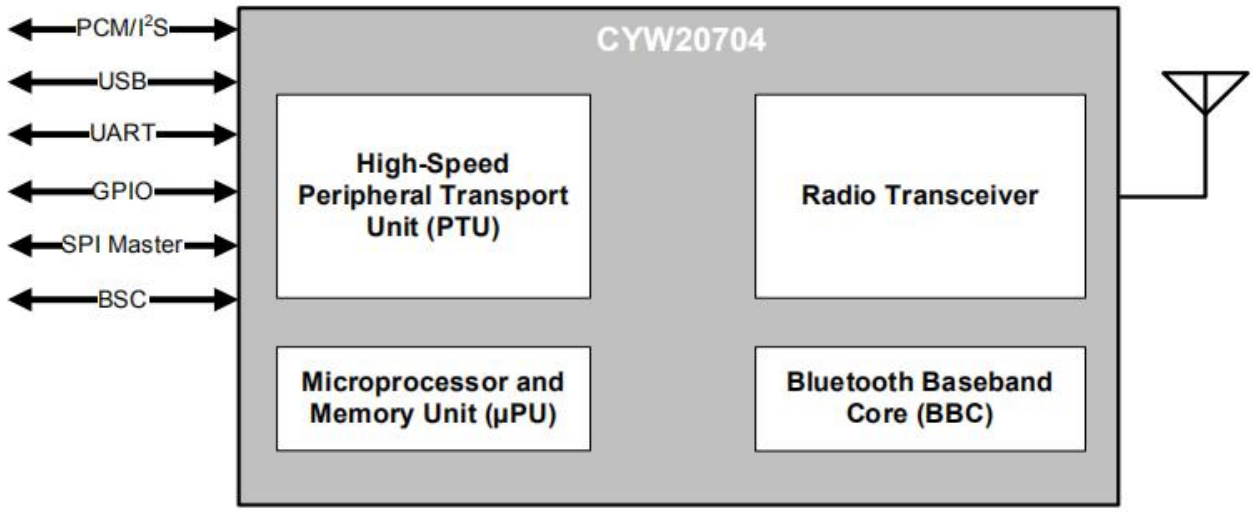


Figure 1. Block Diagram of BB2704-20P

## 2. Pin Configuration and Functions

### 2.1 Module Pin Diagram

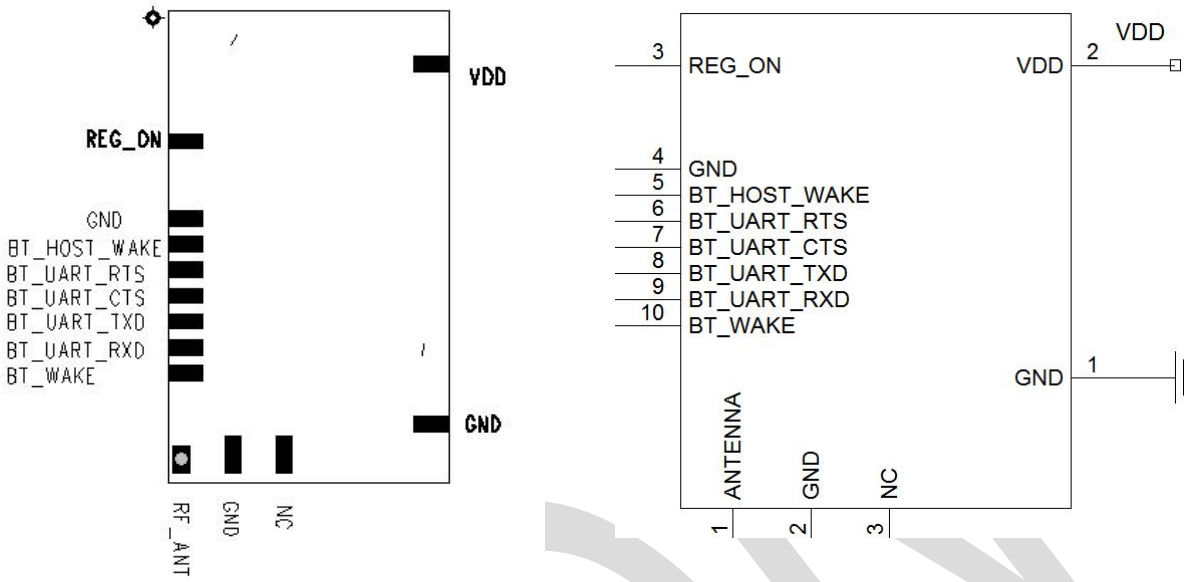


Figure 2. Pin Diagram of BB2704-20P

### 2.2 Pin Functions

| Pin | Name | IO | Description |
|---|---|---|---|
| 1 | GND | – | Ground |
| 2 | VDD | I | POWER SUPPLY |
| 3 | REG_ON | I | Active-low reset input,Internal PULL UP 10K |
| 4 | GND | – | Ground |
| 5 | BT_HOST_WAKE | O | BT_HOST_WAKE<br>A signal from the CYW20704 device to the host indicating that the Bluetooth device requires attention. |
| 6 | BT_UART_RTS | I/O | UART request to send output |
| 7 | BT_UART_CTS | I/O | UART clear to send input |
| 8 | BT_UART_TXD | I/O | UART transmit data |
| 9 | BT_UART_RXD | I/O | UART receive data |

| | | | |
|---|---|---|---|
| 10 | BT_WAKE | I | BT_GPIO_0/BT_DEV_WAKE<br>A signal from the host to the CYW20704 device that the host requires attention |
| 11 | ANTENNA | I/O | RF I/O antenna port |
| 12 | GND | – | Ground |
| 13 | NC | | NC |

## 3. Specifications

### 3.1 Absolute Maximum Rating

Caution! The absolute maximum ratings in the following table indicates voltages levels where permanent physical damage to the device can occur, even if these limits were exceeded for only a brief duration.

| Requirement Parameter | Specification | | | Unit |
|---|---|---|---|---|
| | Min. | Typ. | Max. | |
| Operating Temperature | -30 | 25 | 85 | ℃ |
| Storage Temperature | -40 | | 125 | ℃ |
| VDD IO | 3 | 3.3 | 3.6 | V |
| Latch-up | -200 | | 200 | MA |

### 3.2 Recommended Operating Conditions

| Requirement Parameter | Specification | | | Unit |
|---|---|---|---|---|
| | Min. | Typ. | Max. | |
| VBAT | 3 | 3.3 | 3.6 | V |
| 2.5V LDO input | 3 | 3.3 | 3.6 | V |
| VDD IO | 3 | 3.3 | 3.6 | V |

### 3.3 RF Characteristics

#### 3.3.1 Receiver RF Specifications

| Parameters | Condition | Min. | Typ. | Max. | Unit |
|---|---|---|---|---|---|
| General | | | | | |
| Frequency Range | - | 2402 | - | 2480 | dBm |
| RX Sensitivity (Standard) | GFSK, 0.1% BER, 1 Mbps | - | -93.5 | - | dBm |
| | π/4-DQPSK, 0.01% BER, 2 Mbps | | -95 | | dBm |
| | 8-DPSK, 0.01% BER, 3 Mbps | | -89 | | dBm |
| Maximum Input | GFSK, 1 Mbps | - | - | -20 | dBm |
| Interference Performance | | | | | |
| ■ GFSK Modulation e | | | | | |
| C/I cochannel | GFSK, 0.1% BER | - | 9.5 | 11 | dBm |
| ■ QPSK Modulation | | | | | |
| C/I cochannel | π/4-DQPSK, 0.1% BER | - | 11 | 13 | dBm |
| ■ 8PSK Modulation | | | | | |
| C/I cochannel | 8-DPSK, 0.1% BER | - | 17 | 21 | dBm |
| Out-of-Band Blocking Performance (CW) | | | | | |
| 30 MHZ ~ 2000 MHz | 0.1% BER | - | -10.0 | - | dBm |
| 2000 MHZ ~ 2399 MHz | 0.1% BER | - | -27.0 | - | dBm |
| 2498 MHZ ~ 3000 MHz | 0.1% BER | - | -27.0 | - | dBm |
| 3000 MHZ ~ 12.75 GHz | 0.1% BER | - | -10.0 | - | dBm |
| Intermodulation Performance (CW) | | | | | |
| BT, Df = 4 MHz | - | -39.0 | - | - | kHz |
| Spurious Emissions | | | | | |
| 30 MHz ~ 1 GHz | - | - | - | -62 | dBm |
| 1 GHz ~ 12.75 GHz | - | - | - | -47 | dBm |
| 65 MHz ~ 108 MHz | FM RX | - | -147 | - | dBm/Hz |
| 746 MHz ~ 764 MHz | CDMA | - | -147 | - | dBm/Hz |
| 851 MHz ~ 894 MHz | CDMA | - | -147 | - | dBm/Hz |
| 925 MHz ~ 960 MHz | EDGE/GSM | - | -147 | - | dBm/Hz |
| 1805 MHz ~ 1880 MHz | EDGE/GSM | - | -147 | - | dBm/Hz |
| 1930 MHz ~ 1990 MHz | PCS | - | -147 | - | dBm/Hz |
| 2110 MHz ~ 2170 MHz | WCDMA | - | -147 | - | dBm/Hz |

### 3.3.2 Transmitter RF Specifications

| Parameters | Condition | Min. | Typ. | Max. | Unit |
|---|---|---|---|---|---|
| General | | | | | |
| Frequency Range | - | 2402 | - | 2480 | dBm |
| Class 1: GFSK TX power | - | - | 12 | - | dBm |
| Class1: EDR TX power | | | 9 | | dBm |
| Class 2: GFSK TX power | | | 2 | | dBm |
| Power Control Step | - | 2 | 4 | 8 | dB |
| Modulation Accuracy | | | | | |
| π/4-DQPSK Frequency Stability | - | –10 | - | –10 | kHz |
| π/4-DQPSK RMS DEVM | - | - | - | 20 | % |
| In-Band Spurious Emissions | | | | | |
| 1.0 MHz < \|M – N\| < 1.5 MHz | - | - | - | -26.0 | dBc |
| 1.5 MHz < \|M – N\| < 2.5 MHz | - | - | - | -20.0 | dBm |
| \|M – N\| > 2.5 MHz | - | - | - | -40.0 | dBm |
| Out-of-Band Blocking Performance | | | | | |
| 30 MHZ ~ 1 GHz | - | - | - | -36.0 | dBm |
| 1 GHZ ~ 12.75 GHz | - | - | - | -30.0 | dBm |
| 1.8 GHZ ~ 1.9 GHz | - | - | - | -47.0 | dBm |
| 5.15 GHZ ~ 5.3 GHz | - | - | - | -47.0 | dBm |

### 3.3.3 BLE RF Specifications

| Parameters | Condition | Min. | Typ. | Max. | Unit |
|---|---|---|---|---|---|
| Frequency Range | N/A | 2402 | - | 2480 | dBm |
| RX Sense | GFSK, 0.1% BER, 1 Mbps | - | -96 | - | dBm |
| TX Power | N/A | - | 9 | - | dBm |
| Mod Char: Delta F1 average | N/A | 225 | 255 | 275 | kHz |
| Mod Char: Delta F2 max | N/A | 99.9 | - | - | % |
| Mod Char: Ratio | N/A | 0.8 | 0.95 | - | % |

### 3.4 Power Consumption Summary

BLE Current Consumption:

| Operation Mode | Condition(VBAT (VBAT=3.6V) Typical) | Min. | Typ. | Max. | Unit |
|---|---|---|---|---|---|
| Sleep | | - | 114 | - | μA |
| Standard 1.28s Inquiry Scan | | - | 334 | - | μA |
| 500 ms Sniff Master (–4 Att) | | - | 900 | - | μA |
| DM1/DH1 Master | | - | 32.15 | - | mA |
| DM3/DH3 Master | | - | 38.14 | - | mA |
| DM5/DH5 Master | | - | 38.46 | - | mA |
| 3DH5/3DH1 Master | | | 25.94 | | mA |
| SCO HV3 Master | | | 14.64 | | mA |
| BLE SCAN | | | 355 | | μA |
| BLE ADV: Unconnectable 1.00 sec | | | 176 | | μA |
| BLE Connected 1 sec | | | 835 | | μA |

## 4. Application, Implementation, and Layout

### 4.1 Application Diagram

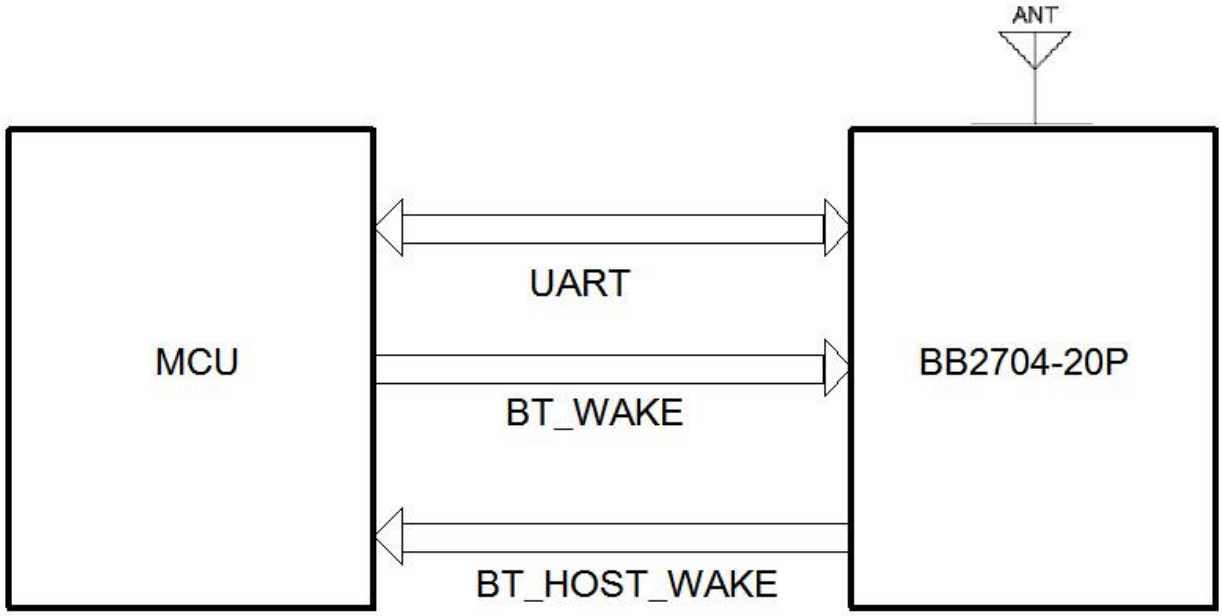


Figure 3. Application Diagram of BB2704-20P

## 4.2 Typical Application Circuit

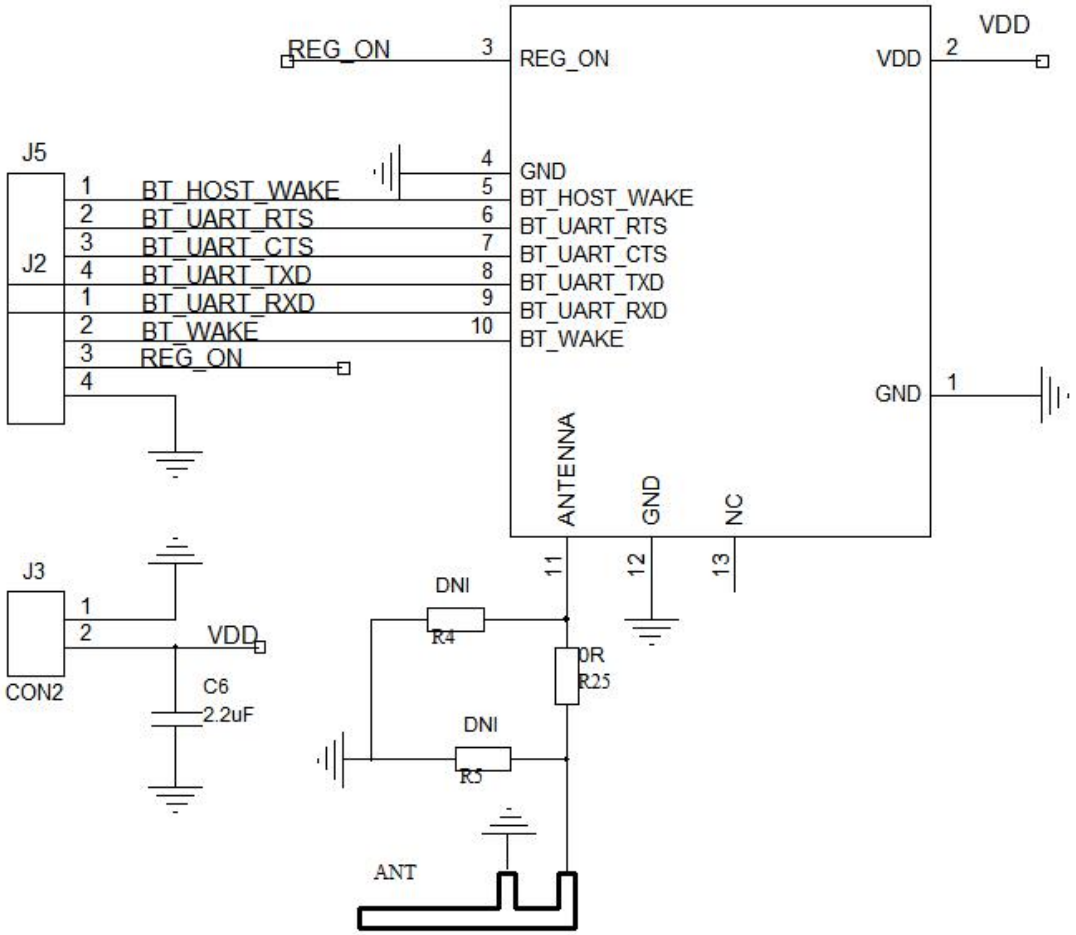


Figure 4. Schematic of BB2704-20P

## 4.3 Layout Guideline

1. Keep RF traces with 50 Ohm impedance.
2. The antenna needs to have enough clearance area.
3. The filter capacitor should be as close as possible to the module.
4. Do not place strong interference lines under the module.

## 5. Mechanical and Package

### 5.1 Module Size

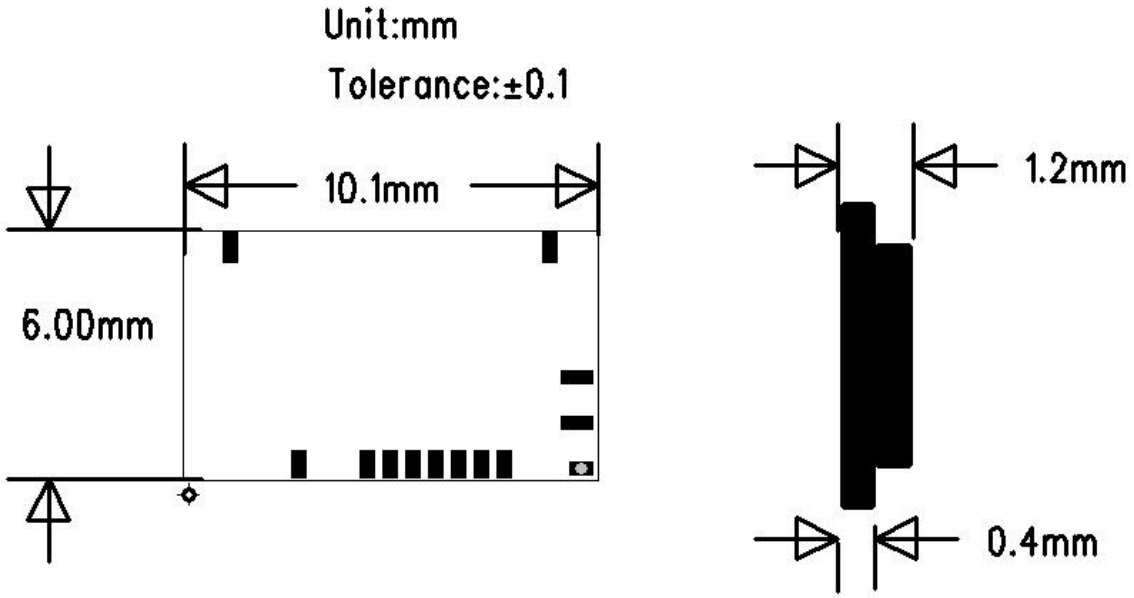


Figure 5. Module Size of BB2704-20P

### 5.2 Recommended PCB Footprint

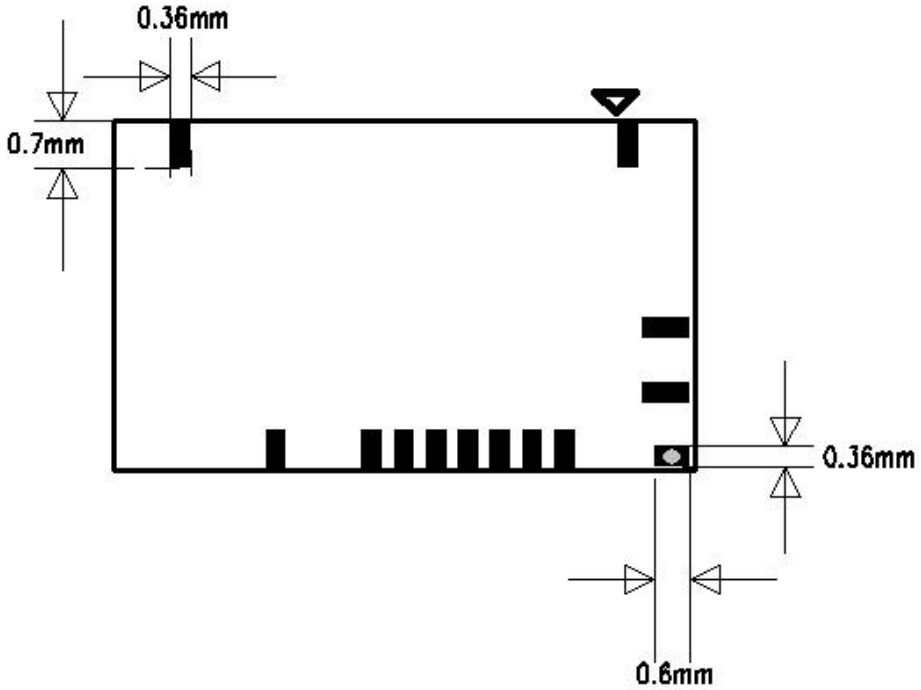


Figure 6. Recommended PCB Footprint

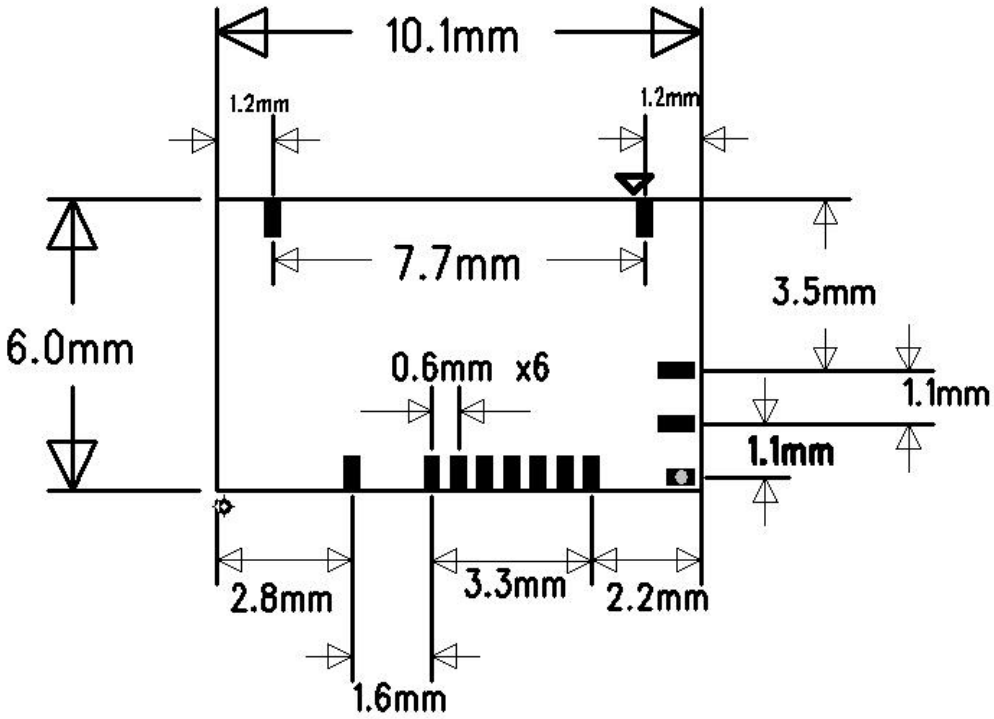


Figure 7. Recommended PCB Footprint

### 5.3 Package Information

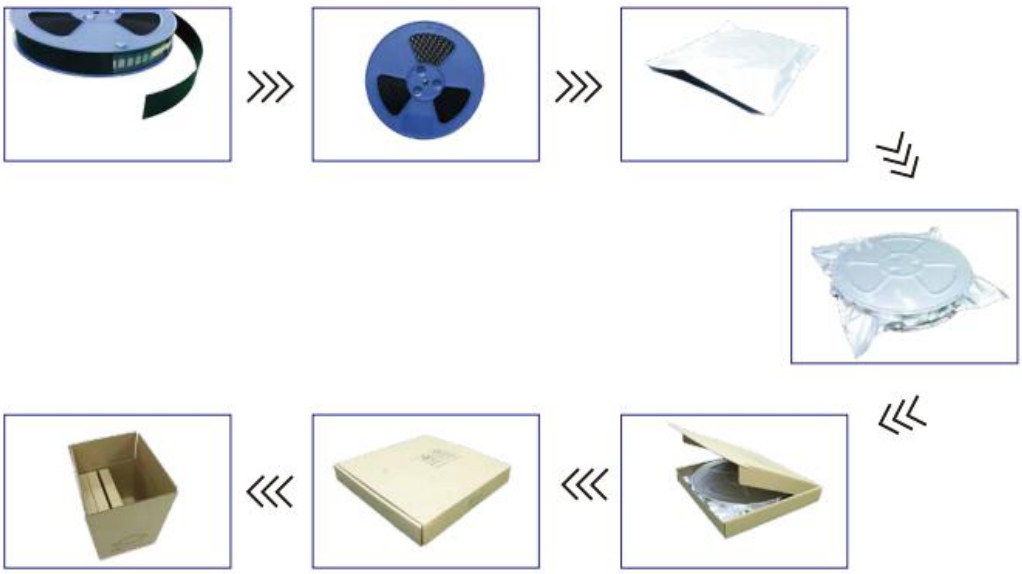

Figure 8. Brief Packaging Process of BB2704-20P Modules

## 6. Thermal Reflow

Referred to IPC/JEDEC standard.

Peak temperature: <250°C

Number of times: ≤2

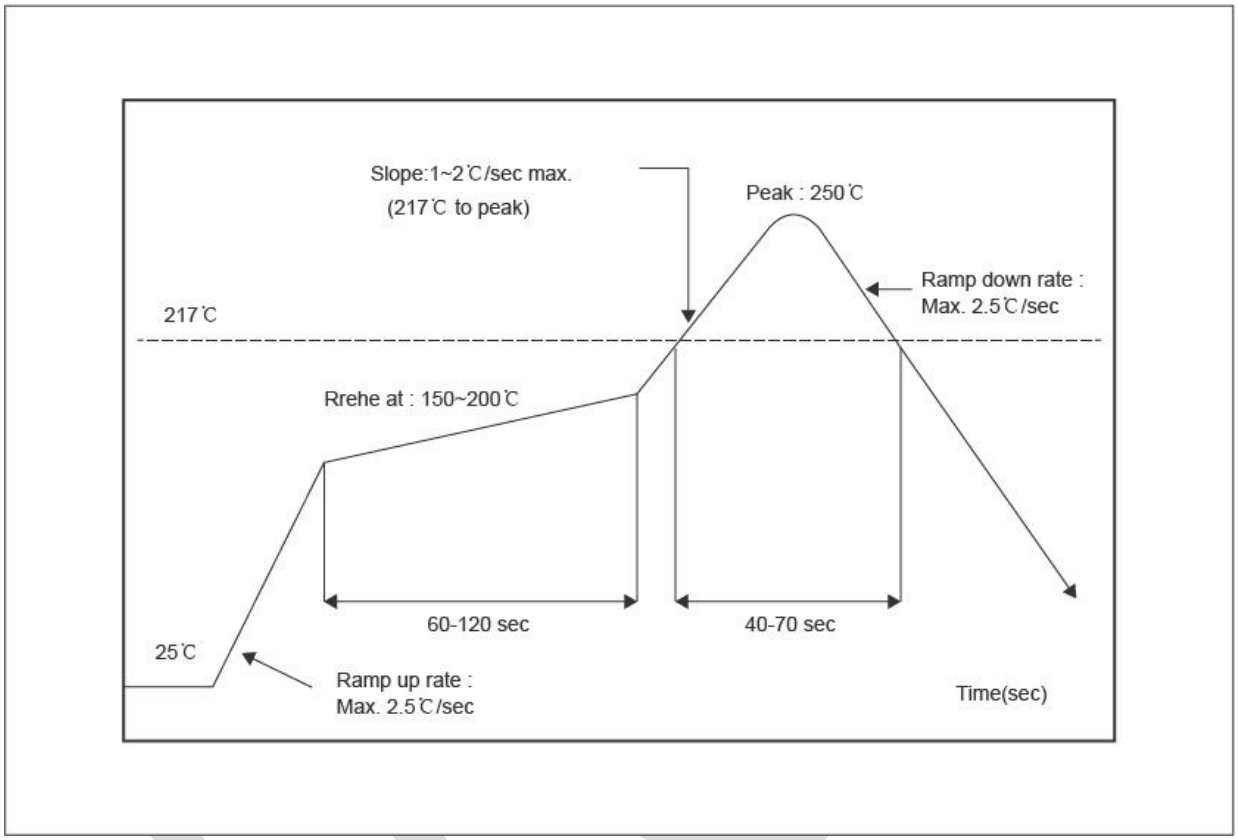


Figure 9. Recommended Reflow for Lead Free Solder

Note: The module is recommended not to go through reflow oven twice;

## 7. Ordering Information

TBD

## 8. Revision History

| Version | Change Content | Reviser | Date |
|---|---|---|---|
| V0.1 | Initial version | Yongwu Zhong | 2019.07.01 |
| V2.0 | Content modification | Yongwu Zhong | 2019.07.20 |
| | | | |